386441	Date: 10-4-02	Dwn. BES	Chk.	Date: By
	Rev.	Description		

WALDON
Fairview, Oklahoma U.S.A.

Tolerance Unless Specified
0.0 ±.125
0.00 ±.062
0.000 ±.015
Angles ±.5°

HARNESS, WIRING
6HC - KUBOTA

386441 Sheet 2 of 2

Mat'l. NOTED

REV. CODE 007 & NEWER

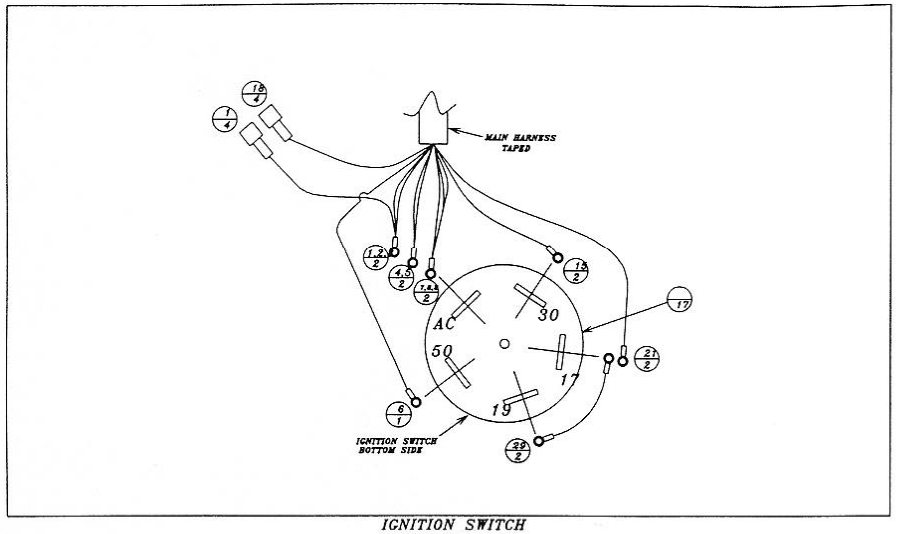

IGNITION SWITCH DIAGRAM

(SEE SHEET 1)

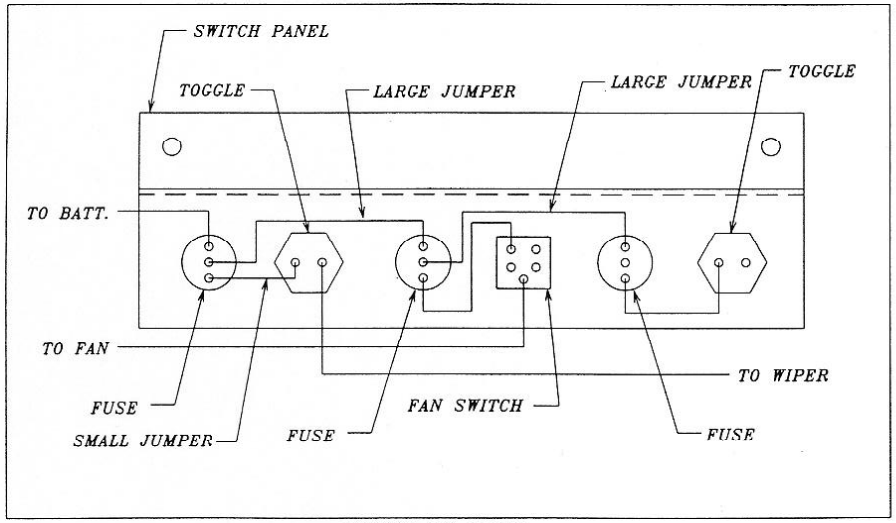

OPTIONAL CAB WIRING

SCHEMATIC

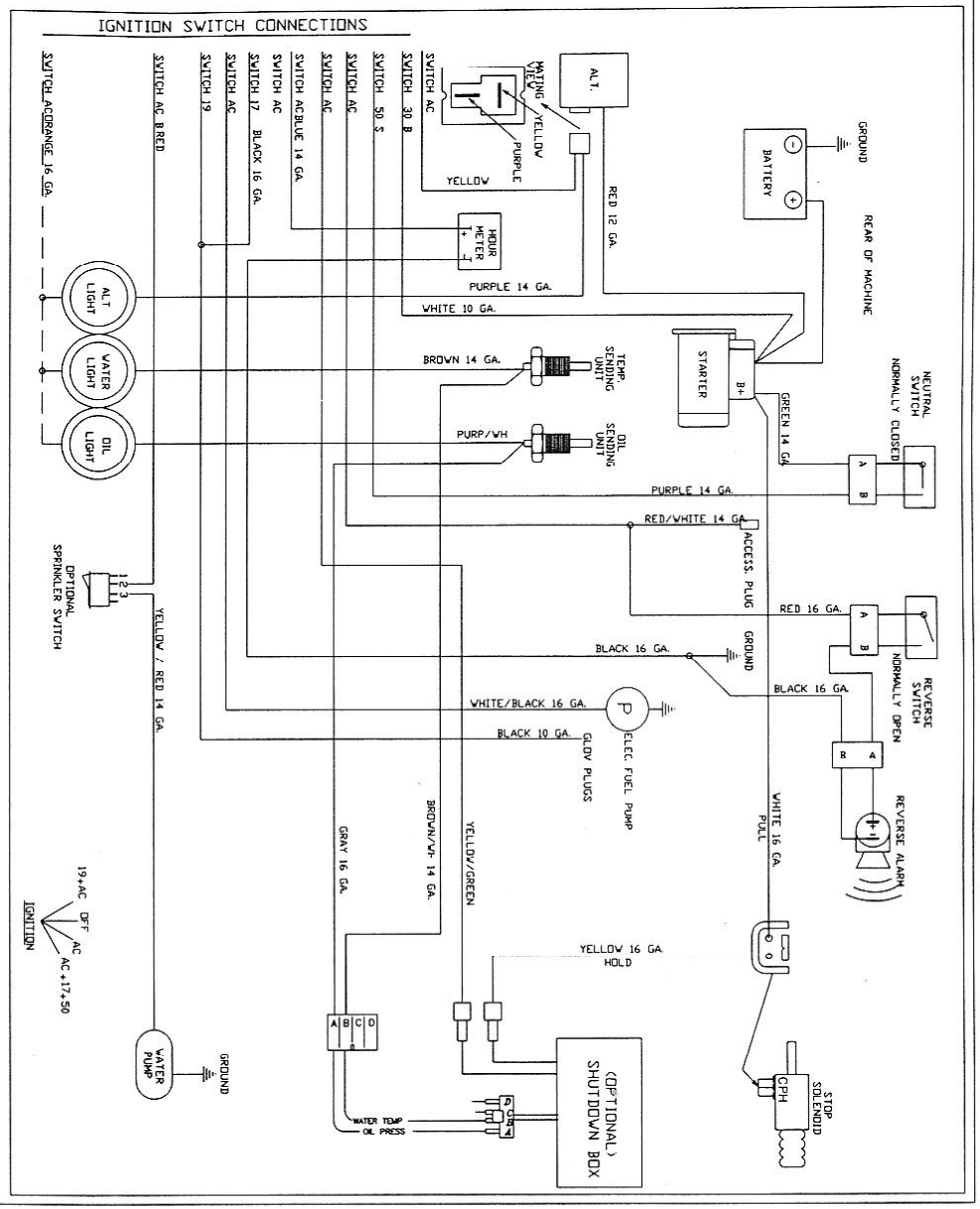

Rev.	Description	Date:	By

Date: 10-4-02 Dwn. BES Chk.

386441 OD

WALDON

Fairview, Oklahoma U.S.A.

Tolerance Unless Specified: .125 0.0 .062 0.00 .015 0.000 .5° Angles

HARNESS, WIRING 6HC - KUBOTA

NOTED

386441 Sheet 1 of 2 Matl.

REV. CODE 007 & NEWER

WIRE LEGEND

NO	COLOR	GAUGE	L	PART NO.
1	RED	16	2	036641
2	BLUE	16	12.5	036574
3	RED/WHITE	16	84	042622
4	RED	16	101	036541
5	YELLOW/GREEN	16	99	030411
6	PURPLE/WHITE	14	101	030502
7	WHITE/BLK	16	78	030460
8	YELLOW	16	82	030403
9	ORANGE/WHITE	16	14	047639
10	ORANGE/WHITE	16	4.5	047639
11	ORANGE/WHITE	16	4.5	047639
12	RED	10	15.5	036632
13	BROWN/WHITE	16	62	042606
14	GREY	16	57	036608
15	WHITE	10	74	067637
16	WHITE	14	23	458273
17	PURPLE	16	88.5	030445
18	YELLOW/RED	16	55	030429
19				
20	RED	16	36	036541
21	BLACK	10	77	036624
22	YELLOW	14	35	036616
23	BLACK	16	73.5	036525
24	PURPLE/WHITE	16	86.5	030486
25	BROWN	16	93.5	036533
26				
27	BLACK	16	30	036525
28	GREEN	14	52	454330
29	BLACK	10	2	036624
30	ORANGE/WHITE	16	4.5	047639
31				

TERMINAL LEGEND
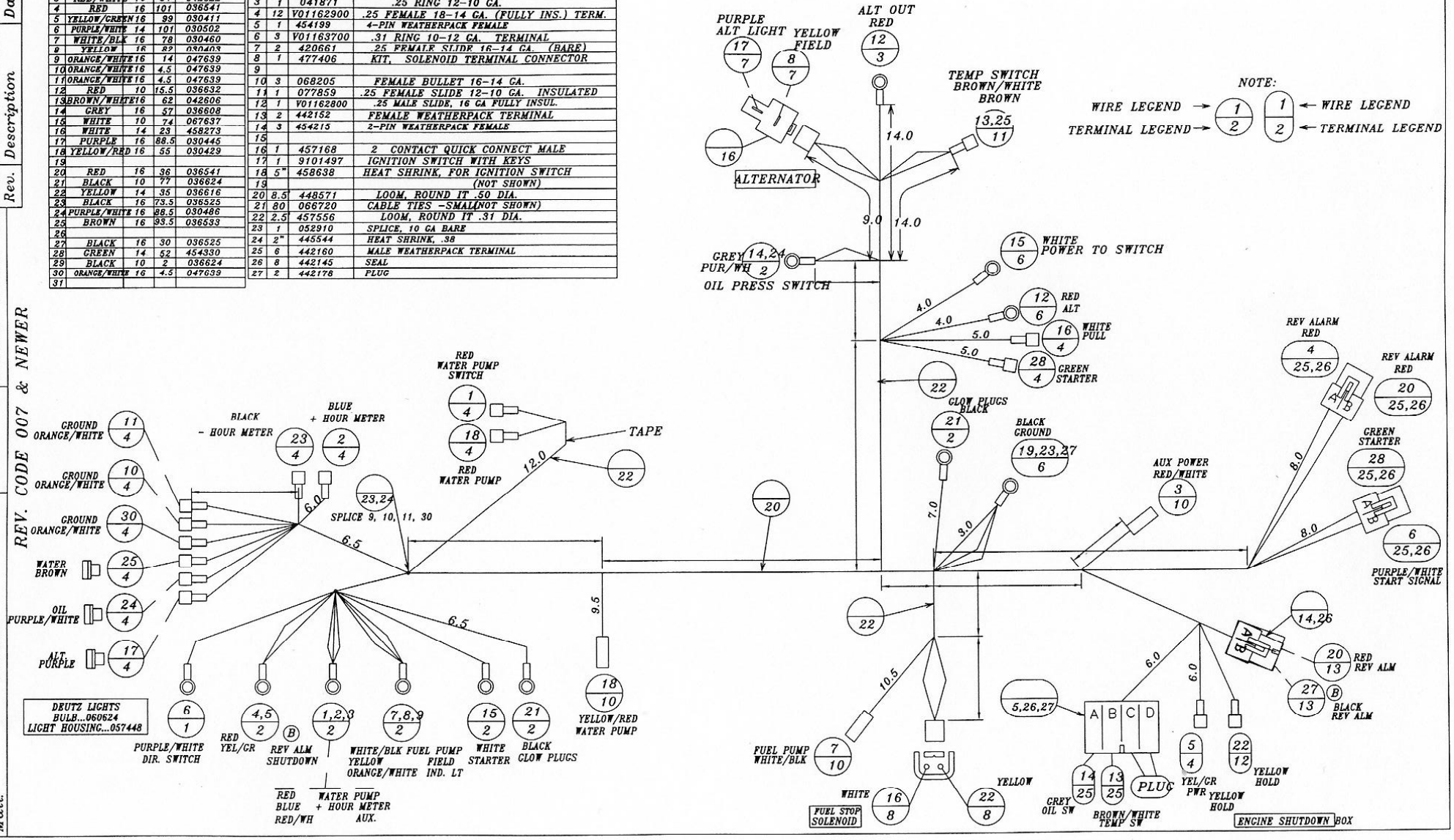
NO	QTY.	PART NO.	DESCRIPTION
1	2	036467	#10 RING 16-14 GA.
2	9	036491	#10 RING 12-10 GA.
3	1	041871	.25 RING 12-10 GA.
4	12	V01162900	.25 FEMALE 18-14 GA. (FULLY INS.) TERM.
5	1	454199	4-PIN WEATHERPACK FEMALE
6	3	V01163700	.31 RING 10-12 GA. TERMINAL
7	2	420661	.25 FEMALE SLIDE 16-14 GA. (BARE)
8	1	477406	KIT, SOLENOID TERMINAL CONNECTOR
9			
10	3	068205	FEMALE BULLET 16-14 GA.
11	1	077859	.25 FEMALE SLIDE 12-10 GA. INSULATED
12	1	V01162800	.25 MALE SLIDE, 16 GA FULLY INSUL.
13	2	442152	FEMALE WEATHERPACK TERMINAL
14	3	454215	2-PIN WEATHERPACK FEMALE
15			
16	1	457168	2 CONTACT QUICK CONNECT MALE
17	1	9101497	IGNITION SWITCH WITH KEYS
18	5"	458638	HEAT SHRINK, FOR IGNITION SWITCH
19			(NOT SHOWN)
20	8.5'	448571	LOOM, ROUND IT .50 DIA.
21	80	066720	CABLE TIES -SMALL(NOT SHOWN)
22	2.5'	457556	LOOM, ROUND IT .31 DIA.
23	1	052910	SPLICE, 10 GA BARE
24	2"	445544	HEAT SHRINK, .38
25	6	442160	MALE WEATHERPACK TERMINAL
26	8	442145	SEAL
27	2	442178	PLUG